ARGOPRO-600-DD-L10-HVG

Argonaut Pro 600mm Weatherproof Emergency Batten, Next Gen, Green Spec, L10 Nanophosphate, DALI-2 Driver, Zoneworks HIVE



PRODUCT INFORMATION	
Product Code	ARGOPRO-600-DD-L10-HVG
MIC	AUB00000036702
Product Description	Argonaut Pro 600mm Weatherproof Emergency Batten, Next Gen, Green Spec, L10 Nanophosphate, DALI-2 Driver, Zoneworks HIVE
Mounting Method	Surface Mount/Suspension
Product Construction'	Recyclable UV Resistant Polycarbonate (PC) Base with Stainless Steel Clips (SS316)
Diffuser Material	Recyclable UV Resistant Polycarbonate (PC)
UL Flammability Rating	UL94 - V2 Self-extinguishing Polycarbonate (PC)
Halogen Free	Yes
Dimensions L x W x H	655mm x 160mm x 106mm
Weight	1.712kg
Ingress Protection (IP) Rating	IP66
Impact Protection (IK) Rating[2]	IK10
Operating Temperature	0°C to 40°C
Supply Voltage	220-240V~ 50Hz
Power Factor	0.85 @ default
Supply Current	102mA +/-20mA
Inrush Current (Max)	46.20A<500µs
Earth Leakage	0.51mA

GENERAL LIGHTING - SPECIFICATION	
Colour Temperature	4000K
Colour Rendering Index (CRI)	≥ 90 (R9 > 50)
LED Colour Consistency	3 SDCM
Short Term Light Modulation (PstLM)	≤ 1.0
Stroboscopic Visibility Measure (SVM)	≤ 0.4
Flicker Free[3]	Yes
Luminaire Output Configuration	Fixed Single Output
Total Lumen Output	2564 lm (143.3 lm/W) @ default (*refer to next page for details)*
Power Consumption	17.9W@ default (*refer to next page for details)*
Rated LED lifetime[4]	L70/B50 Ta 40 °C: Reported > 120,000h, Projected 230,800h L80/B20 Ta 40 °C: Reported > 120,000h, Projected 134,600h L90/B10 Ta 40 °C: Reported 63,600h, Projected 63,600h
Driver[5]	LED Driver – Tridonic LCA 25W 350-1050mA one4all SC PRE,20-50V

ARGOPRO-600-DD-L10-HVG

Argonaut Pro 600mm Weatherproof Emergency Batten, Next Gen, Green Spec, L10 Nanophosphate, DALI-2 Driver, Zoneworks HIVE

EMERGENCY LIGHTING - SPECIFICATION	
Emergency Operating Mode	Sustained
Emergency Testing System	Zoneworks HIVE (RF) 2.4GHz
Battery	Lithium Nanophosphate, 3.3V 5000mAh
Battery Configuration	Integral Battery
Battery Charging Method	Intelligent Current Limited Constant Voltage
AS/NZS 2293 Classification	C0=D63 C90=D40

PRODUCT INFORMATION - COMPLIANCE	
Green Building Schemes[6]	Compliant with Green Star Flicker, CRI and MacAdam/SDCM Requirements
Applicable Standards	AS/NZS 3820, AS CISPR 15, AS/NZS 2293.3, AS 60598.2.22
Compliance Marking (RCM)	

REPLACEMENT PARTS	
Part Number	**Description**
1330038	240V Driver
AUM01970050002	Emergency Driver
801-00092	240V LED Strip
1530230	Battery

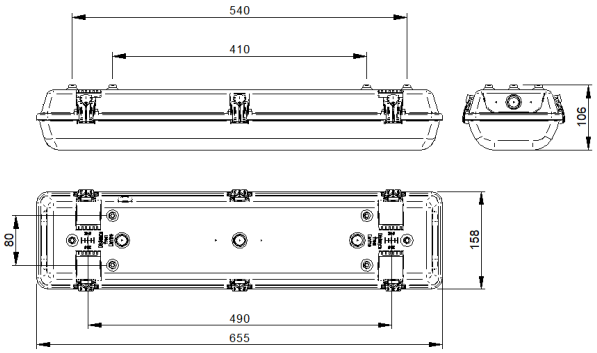

Power Consumption & Lumen Output	Max Charge, Lamp On	Standby Charge, Lamp On	Standby Charge, Lamp Off	Lumen Output
Output (700mA)	20.2W	17.9W	0.7W	2564 lm

[1] All plastic materials will degrade under UV exposure over time, resulting in potential yellowing and surface degradation. UV stabilised materials are generally suited to indoor or sheltered environments with indirect UV exposure, while UL 746C – F1 rated UV resistant materials are suitable for outdoor applications with direct exposure to UV and moisture, providing enhanced resistance and reducing the rate of UV-induced ageing.
[2] When luminaire is ceiling mounted using appropriate fixings in accordance with the product instruction.
[3] An LED luminaire is considered flicker-free if the SVM value is ≤ 0.4 and PstLM value is ≤ 1.0.
[4] The projected value has been calculated by extrapolation of the LM80 data using the Energy Star Calculator.
[5] Products fitted with the Mustang Pro combo driver have two active (mains-230V) connections. All operating current is supplied via Lem (Permanent Active, unswitched) only and shall be sized accordingly. Lsw (Switched Active, control only) is a mains-voltage control line and carries no load.
[6] Designed to meet the applicable building scheme requirements at the document version date. For full details, refer to the relevant building scheme specification.

The product details described in this document are current as at the version date of the document. We reserve the right to change product design, specifications or materials (Specifications) as part of our continuous improvement program. Please confirm the applicable Specifications at the time of placing your order.