ARGOPLUS-600-DD

Argonaut Plus 600mm Weatherproof Batten, Next Gen, Green Spec, Switchable Colour, DALI-2 Driver



PRODUCT INFORMATION	
Product Code	ARGOPLUS-600-DD
MIC	AUB00000029902
Product Description	Argonaut Plus 600mm Weatherproof Batten, Next Gen, Green Spec, Switchable Colour, DALI-2 Driver
Mounting Method	Surface Mount/Suspension
Product Construction'	Recyclable UV Stabilised Polycarbonate (PC) Base with Stainless Steel Clips (SS304)
Diffuser Material	Recyclable UV Stabilised Polycarbonate (PC)
UL Flammability Rating	UL94 - V2 Self-extinguishing Polycarbonate (PC)
Halogen Free	Yes
Dimensions L x W x H	655mm x 160mm x 106mm
Weight	1.415kg
Ingress Protection (IP) Rating	IP66
Impact Protection (IK) Rating[2]	IK10
Operating Temperature	0°C to 40°C
Supply Voltage	220-240V~ 50Hz
Power Factor	0.91 @ default
Supply Current	85mA +/-20mA
Inrush Current (Max)	44.20A<500µs
Earth Leakage	0.18mA

GENERAL LIGHTING - SPECIFICATION	
Colour Temperature	Switchable between 3000K / 4000K (Default) / 5700K
Colour Rendering Index (CRI)	≥ 85 (4000K), > 80 (3000K & 5700K)
LED Colour Consistency	3 SDCM
Short Term Light Modulation (PstLM)	≤ 1.0
Stroboscopic Visibility Measure (SVM)	≤ 0.4
Flicker Free[3]	Yes
Luminaire Output Configuration	Fixed Single Output
Total Lumen Output	2351 lm (136.2 lm/W) @ default (*refer to next page for details)*
Power Consumption	17.3W@ default (*refer to next page for details)*
Rated LED lifetime[4]	L70/B50 Ta 40 °C: Reported > 54,000h, Projected 173,050h L80/B20 Ta 40 °C: Reported > 54,000h, Projected 98,700h L90/B10 Ta 40 °C: Reported 47,100h, Projected 47,100h
Driver[5]	LED Driver- Tridonic LCA 25W 350-1050mA one4all SC PRE,20-50V

ARGOPLUS-600-DD

Argonaut Plus 600mm Weatherproof Batten, Next Gen, Green Spec, Switchable Colour, DALI-2 Driver

PRODUCT INFORMATION - COMPLIANCE	
Green Building Schemes[6]	Compliant with Green Star Flicker, CRI and MacAdam/SDCM Requirements
Applicable Standards	AS/NZS 3820, AS CISPR 15, AS/NZS 60598.2.1
Compliance Marking (RCM)	

REPLACEMENT PARTS	
Part Number	**Description**
1330038	240V Driver
8002751	240V LED Strip

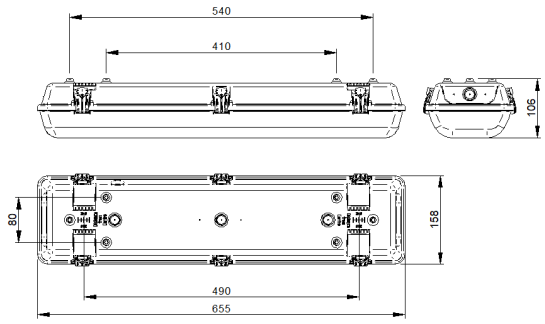

Power Consumption & Lumen Output	**Output (700mA)**	
	Lamp On	**Lumen Output**
3000K	17.8W	2192 lm
4000K (Default)	17.3W	2351 lm
5700K	17.8W	2304 lm

[1] All plastic materials will degrade under UV exposure over time, resulting in potential yellowing and surface degradation. UV stabilised materials are generally suited to indoor or sheltered environments with indirect UV exposure, while UL 746C – F1 rated UV resistant materials are suitable for outdoor applications with direct exposure to UV and moisture, providing enhanced resistance and reducing the rate of UV-induced ageing.
[2] When luminaire is ceiling mounted using appropriate fixings in accordance with the product instruction.
[3] An LED luminaire is considered flicker-free if the SVM value is ≤ 0.4 and PstLM value is ≤ 1.0.
[4] The projected value has been calculated by extrapolation of the LM80 data using the Energy Star Calculator.
[5] Products fitted with the Mustang Pro combo driver have two active (mains-230V) connections. All operating current is supplied via Lem (Permanent Active, unswitched) only and shall be sized accordingly. Lsw (Switched Active, control only) is a mains-voltage control line and carries no load.
[6] Designed to meet the applicable building scheme requirements at the document version date. For full details, refer to the relevant building scheme specification.

The product details described in this document are current as at the version date of the document. We reserve the right to change product design, specifications or materials (Specifications) as part of our continuous improvement program. Please confirm the applicable Specifications at the time of placing your order.